IMPORTANT NOTICE - DISCLAIMER AND EXCLUSION - PLEASE CAREFULLY READ

- The information in this guide is not a product of warranty. To the maximum extent allowed by law, none of Omni-tuff Group Pty Ltd, all companies related to it, and the officers, employees and agents of any of them ("Omni-tuff Parties or Engistics Parties") will be liable for any act or omission that is said to give rise to any form of damages or loss of profit or interest or cost claims for any form of personal injury, property damage or consequential loss or claims arising from a death made by any person or entity arising from use of this Guide or any product displayed in it.
- All readers and users of this Guide are responsible for the correct use of the products displayed in it according to the individual conditions and requirements of any piece of equipment or other thing placed on them.
- No Omni-tuff Parties will be liable for any loss or damage of any form arising from use of the products displayed in this Guide which use does not comply with/or falls outside the scope of this Guide.
- This is a driver and user guide to the certification E01954-LRC1 which satisfies the loading Performance Standards specified in Schedule 7 of the Heavy Vehicle (Mass, Dimension and Loading) National Regulation 2021. Certification provided by RPEQ 21522, for Omni-tuff Group Pty Ltd. Compliance can only be achieved when all aspects of this Guide are adhered to in full by a user. Additional requirements may be necessary under some conditions that are outside the scope of this certification.
  In those circumstances you must contact Omni-tuff Group Pty Ltd before using any product displayed in this Guide.
- No changes to that certification are permitted unless first approved in writing by both Omni-tuff Group Pty Ltd and Engistics Pty Ltd.
- Any deviation from this Guide must first be approved in writing by Omni-tuff Group Pty Ltd and Engistics Pty Ltd.
- Copyright in the entirety of this document and any modifications or adaptations or variations to it at any time in the future remains the sole property of Omni-tuff Group Pty Ltd. It must not be reproduced in any material form and whether in hard copy or electronically except as permitted in writing by Omni-tuff Group Pty Ltd.

Operational Considerations:

- Assess the condition of the pallet and associated equipment (incl. bolts, rubber, pins, vibration dampeners, weather cover, straps etc.) before each use.
- Discard equipment with visible signs of damage and replace with an equivalent.
- Structural aspects, such as welds, should be inspected visually before each use and by NDT periodically according to the End Users preservation requirements.
- Do not use the pallet if structural damage is observed. Consult Daywalk for repair advice.
- Bolts used to secure the motor/gearbox to the Transporta are recommended by Daywalk to be single use only.

This Guide

- Covers the Daywalk Transporta pallet (SKU 13-PCTR/5000/23200/16.5T/CLSB) with a single item weighing up to 16,500kg secured to it and transported by road in Australia
- Is a loader and driver guide to the certification E01954-LRC1 which satisfies the loadining requirements of the Performance Standard contianed in Schedule 7 of the Heavy Vehicle (Mass, Dimension and Loading) National Regulation 2021

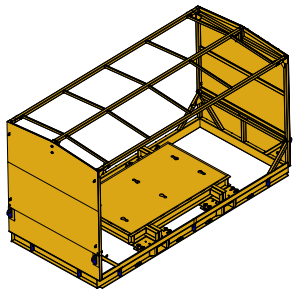

Daywalk Transporta Pallet

Key Elements

- ✓ Equipment must be in good working order
- ⚠ Damaged pallets should be inspected by a competent person to confirm their structural capacity before use
- ✓ Place rubber with minimum coefficient of friction of 0.6 and minimum load capacity of 6.0 N/mm² between the item and the pallet
- ✓ Rubber must have capacity to withstand load without failing (i.e. crushing, tearing or disintegrating etc.)
- ✓ Rubber should be inspected prior to use of the pallet. If noticeable wear and tear is present, rubber should be removed and replaced
- ✗ No low friction surfaces (i.e. steel on steel)
- ✓ Position the item such that the Centre of Gravity [CoG] is located between the tyne pockets and centrally across the width of the pallet
- ✓ Minimum item foot size is 4 off 150 x 150mm
- ✓ Secure the item to the pallet with a minimum of 4 Grade 8.8 bolts, torqued per the requirements specified in Table 1

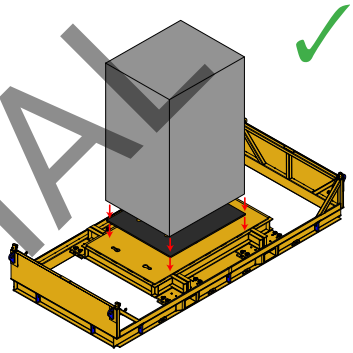

Rubber between item and pallet

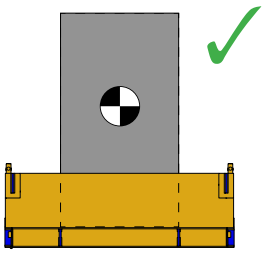

Central CoG Position

Table 1: Required Bolt Torque for Items up to 16,500kg

Bolt Diameter	Number of Bolts		
	4	6	8
30mm	340 Nm	230 Nm	170 Nm
36mm	410 Nm	275 Nm	205 Nm
42mm	480 Nm	320 Nm	240 Nm
48mm	545 Nm	365 Nm	275 Nm
56mm	635 Nm	425 Nm	320 Nm
64mm	730 Nm	485 Nm	365 Nm
72mm	820 Nm	545 Nm	410 Nm

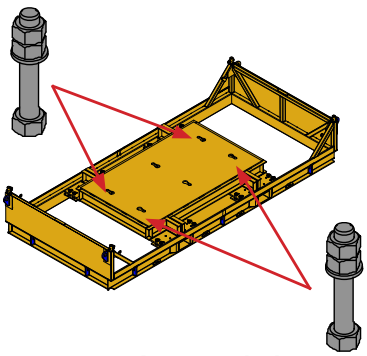

Secure with min. 4 bolts

Key Elements con.

- ✓ Ensure base lugs lashing capacity of 2000kg is not exceeded during transport
- ✓ Ensure elevated lugs lashing capacity of 2000kg is not exceeded during transport
- ⚠ Yellow lugs must only be used to remove weather cover frame and not as general lifting point.
- ✓ Ensure weather cover ratchets do not exceed 100kg of pre-tension per lug
- ⚠ The maximum load capacity of the pallet is also dependent on the stability of the item - refer to Tables 2 & 3

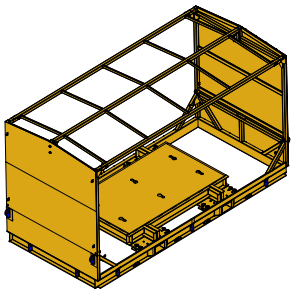

Daywalk
Transporta Pallet

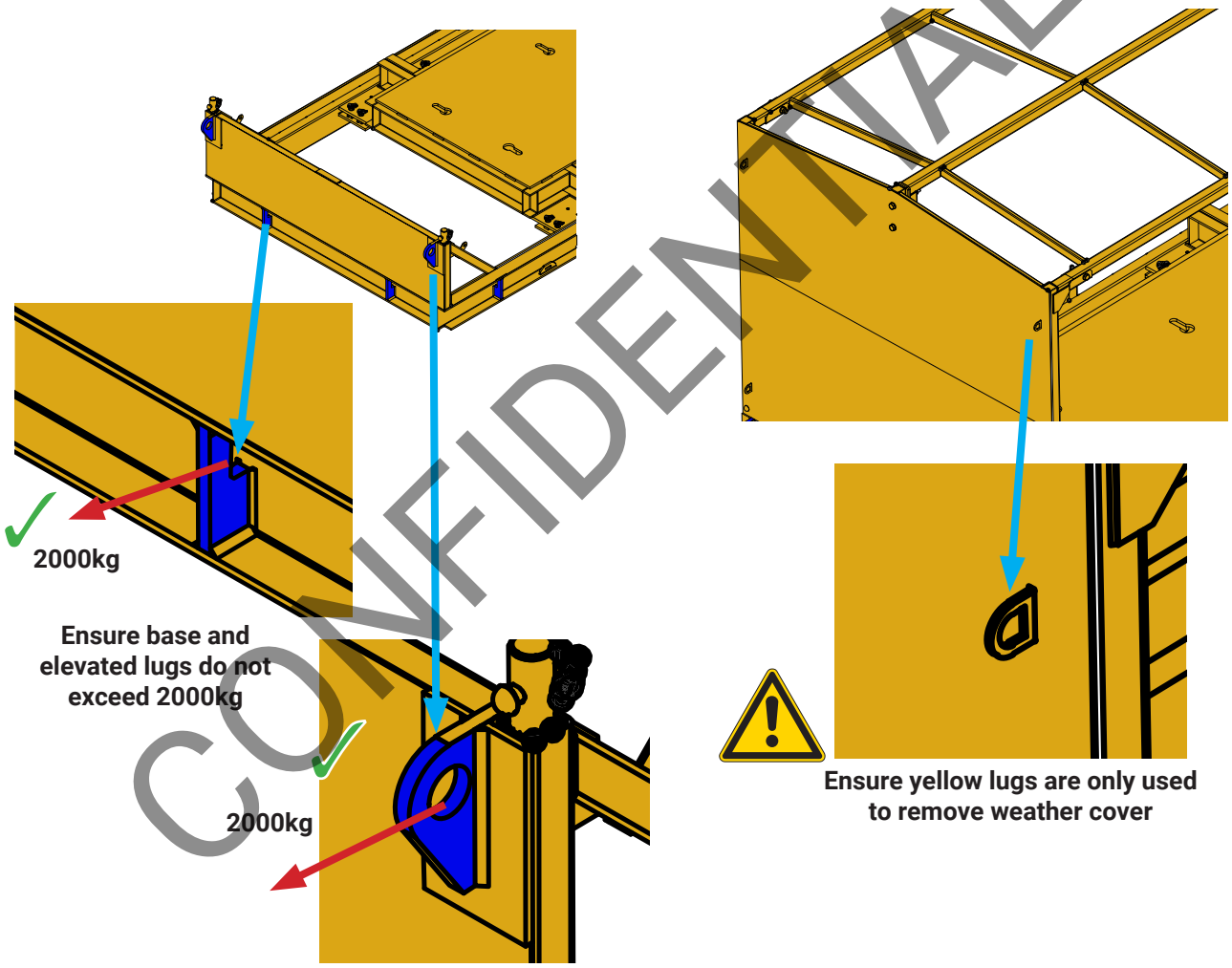

Ensure weather protection ratchets have a pretension of no greater than 100kg

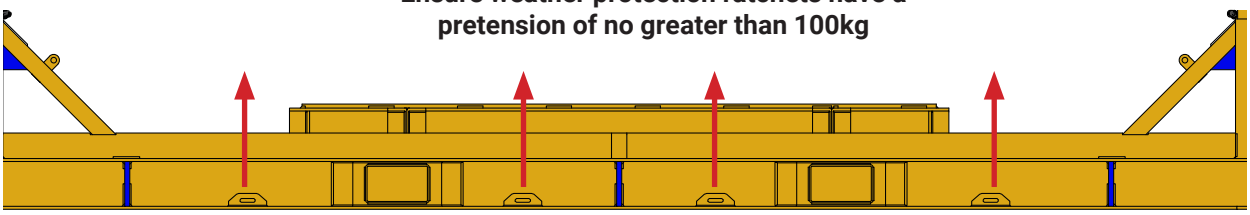

Load Capacity - Load Stability

- ✓ The maximum load capacity of the pallet is also dependent on the stability of the item in the forwards and sideways directions (i.e. the base width, base length and centre of gravity height)
- ✓ Tables 2 and 3 specify the maximum pallet capacity based on load stability in the forwards and sideways directions respectively
- ✓ The pallets capacity is the lesser value obtained from the two tables
- ⚠ Items may topple forwards if they have a narrow base length

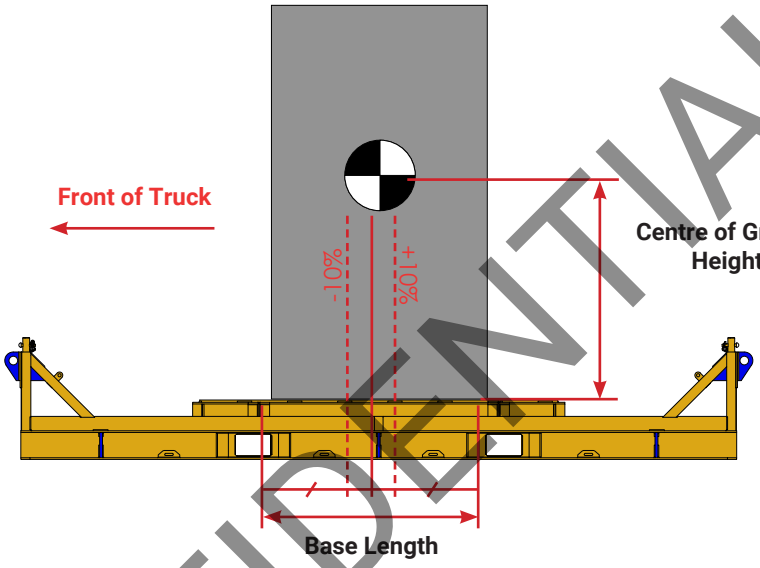

- ✓ The maximum forwards toppling load capacity for items with a centre of gravity <u>within 10% of the base length from the mid point</u> is shown in Table 2

Table 2: CoG Limitations - Forwards Toppling

Base Length	Centre of Gravity Height (mm)		
	0 - 1100	1101 - 1200	1201 - 1400
1800 - 2000mm	16500kg	13265kg	7955kg
2001 - 2200mm	16500kg	16500kg	11055kg
2201 - 2400mm	16500kg	16500kg	16210kg
2401 - 2500mm	16500kg	16500kg	16500kg

⚠ **Items may topple sideways if they have a narrow base width**

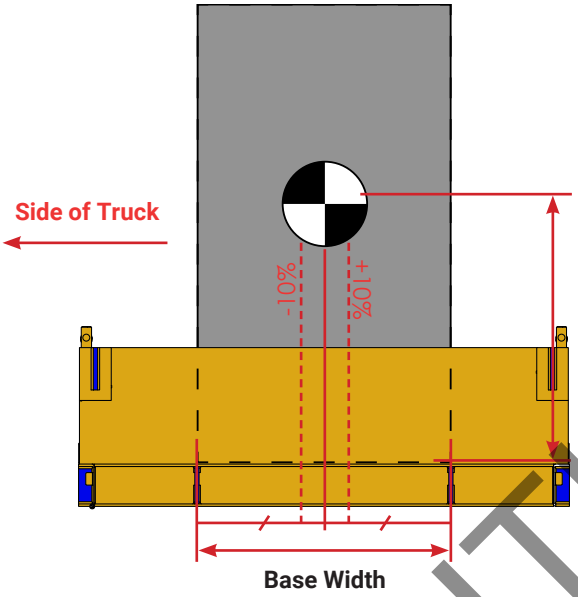

✓ **The maximum sideways toppling load capacity for items with a centre of gravity <u>within 10% of the base width from the mid point</u> is shown in Table 3**

Table 3: CoG Limitations - Sideways Toppling

Base Width	Centre of Gravity Height (mm)				
	0 - 700	701 - 850	851 - 1000	1001 - 1200	1201 - 1400
700 - 900mm	16500kg	8535kg	5625kg	3865kg	2945kg
901 - 1100mm	16500kg	16500kg	11370kg	6630kg	4680kg
1101 - 1300mm	16500kg	16500kg	16500kg	12160kg	7480kg
1301 - 1500mm	16500kg	16500kg	16500kg	16500kg	12770kg

Load Restraint

- ✓ Place rubber (with min. coefficient of friction of 0.6 and min. load capacity of 6.0 N/mm²) or rough sawn timber (with min. coefficient of friction of 0.4) between the pallet and the deck
- ✓ Load the pallet centrally across the truck
- ✓ Secure the pallet to the truck with chains in the arrangements shown (chains are to be mirrored on opposing side)
- ✓ Use chains only. Chains must be min. 8mm, compliant to AS4344 and pre-tensioned to 1000kg.f
- ✓ All lashing components must have a minimum Lashing Capacity (LC) of 2000kg.f
- ✓ Maximum allowable total weight (Pallet TARE + Item) is 19,100kg for the restraint systems shown

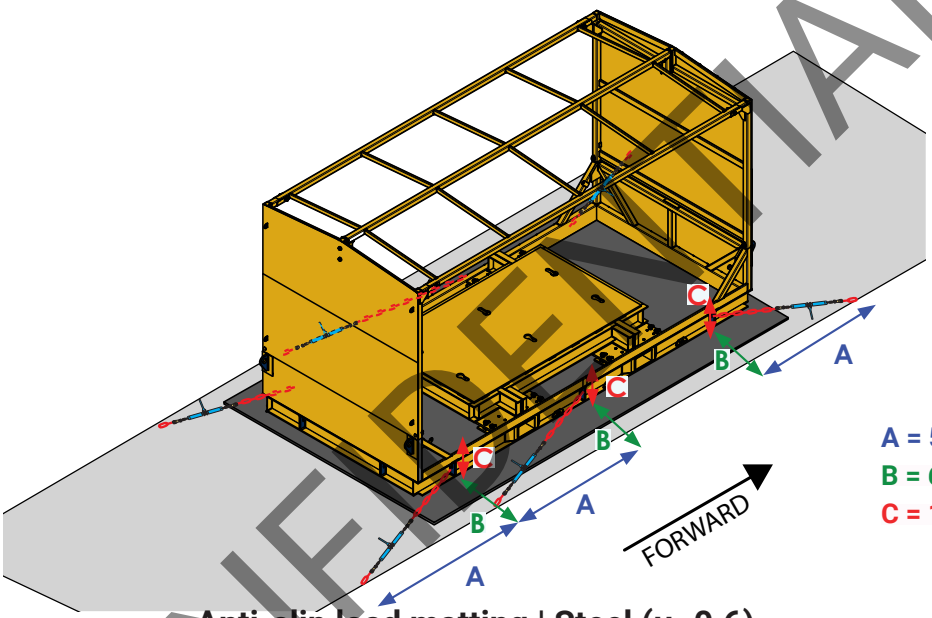

A = 500-1000mm
B = 60mm
C = 100mm

Anti-slip load matting | Steel (μ=0.6)

D = 1000-1500mm
E = 2400mm
F = 700mm

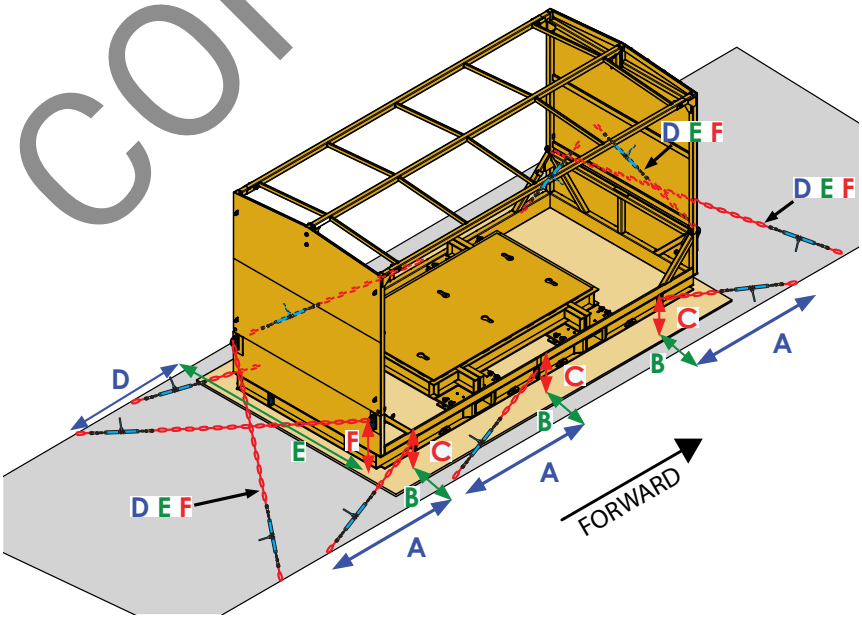

Industrial rubber / rough sawn plywood | Steel (μ=0.4)